G14197- Miniature Stepper Motor

ELECTRONIC GOLDMINE

www.goldmine-elec.com

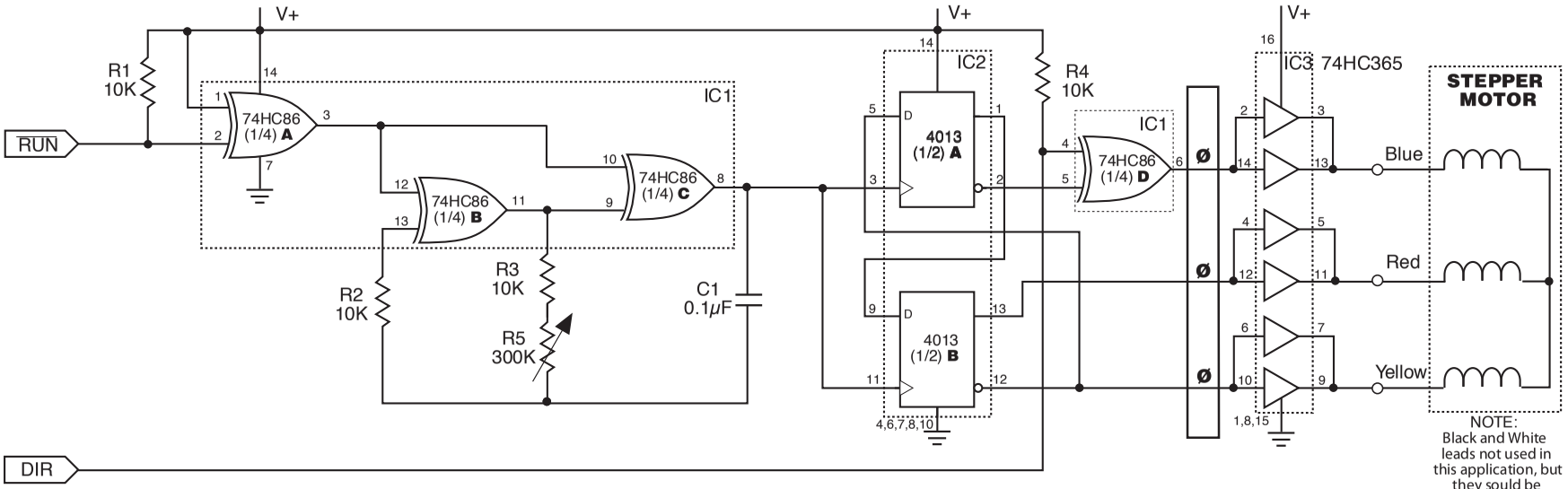

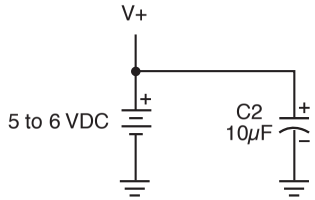

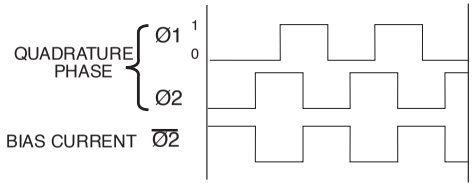

©2003 The Electronic Goldmine